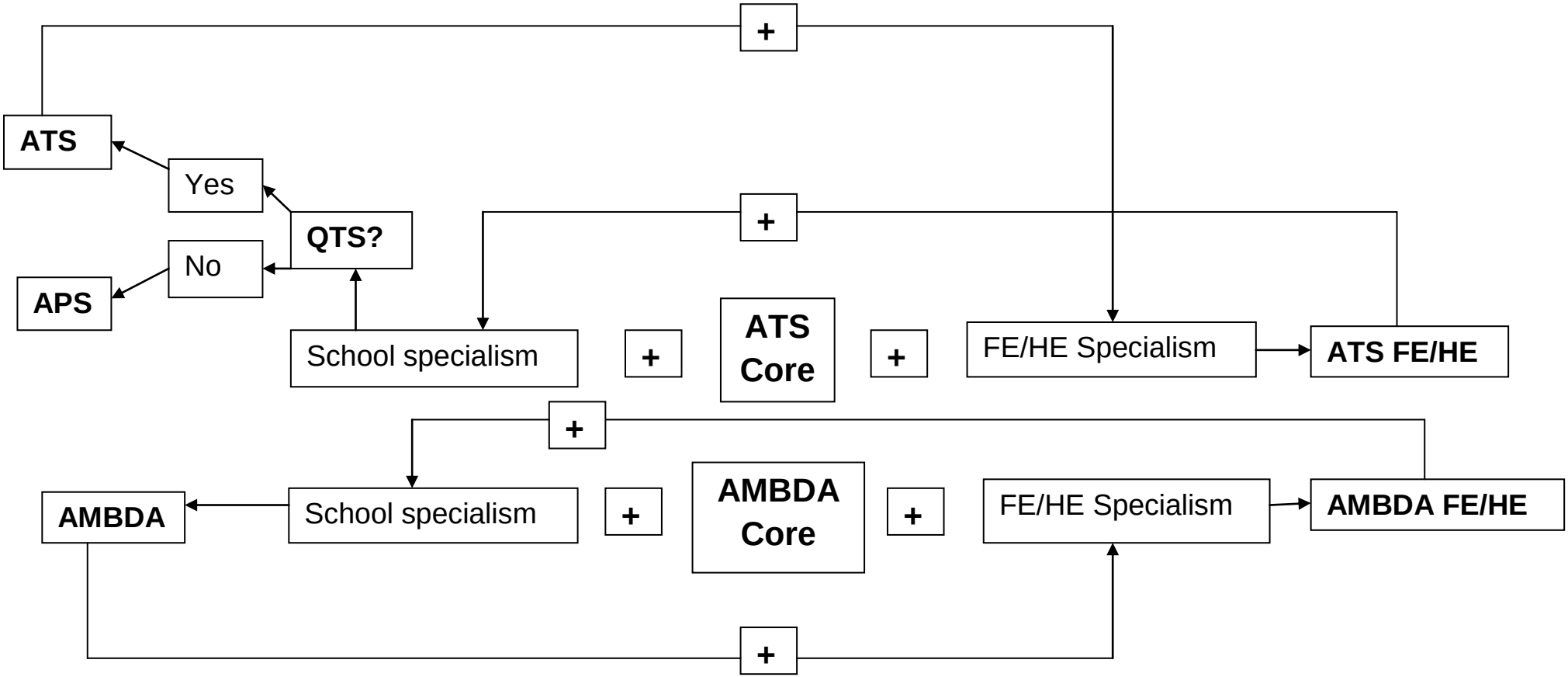Relationship between ATS, AMBDA, ATS FE/HE & AMBDA FE.HE